ASSEMBLY INSTRUCTION
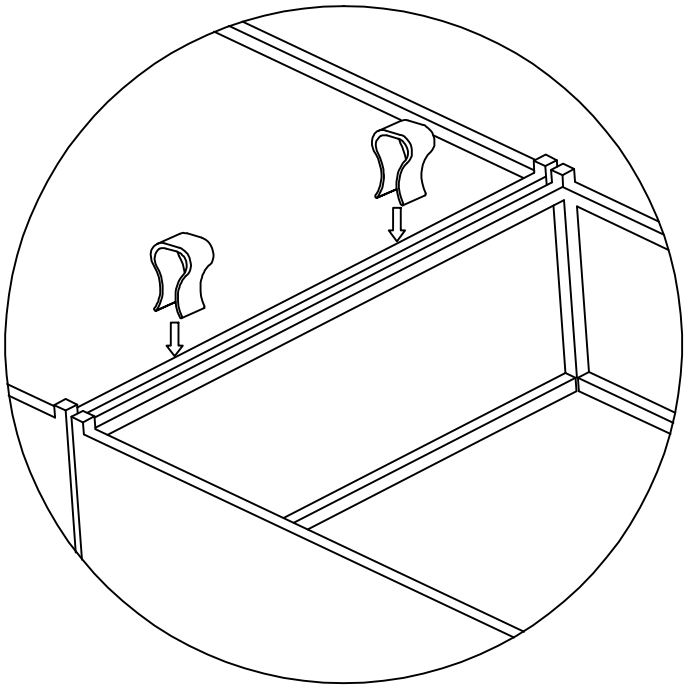
	2